REV. 9-11-02: CHANGED GENERAL NOTE (J).

REV. 4-15-03: CHANGED DRAWING NAME.

REV. 7-29-04: CORRECTED GENERAL NOTE (I).

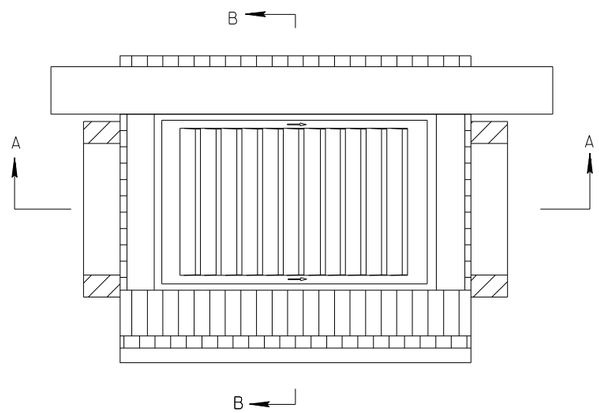

PLAN VIEW

REINFORCING STEEL LEGEND

CATCH BASIN MAXIMUM DEPTH NOTE

MAXIMUM DEPTH FOR THIS STRUCTURE IS 1.52 m. WHEN DEPTH REQUIREMENTS EXCEED THIS DEPTH THE CONTRACTOR IS TO USE OTHER VERSIONS OF THE NO.10 CATCH BASIN.

GENERAL NOTES

(A) DRAWING TO BE USED FOR ALL CAST-IN-PLACE NO. 10LPC CONCRETE CATCH BASINS AND ALL PRECAST NO. 10LPC CONCRETE CATCH BASINS THAT ARE INSTALLED IN AREA WITH A LOWERED CURB SUCH AS A DRIVEWAY ENTRANCE.

(B) CAST-IN-PLACE CONCRETE CATCH BASINS SHALL BE CONSTRUCTED IN ACCORDANCE WITH STANDARD SPECIFICATIONS, SECTION 611 AND/OR SPECIAL PROVISIONS.

(C) THE CONTRACTOR MAY WITH PERMISSION FROM THE ENGINEER SUBSTITUTE PRECAST CATCH BASINS FOR CAST-IN-PLACE CATCH BASINS PROVIDED THAT ALL PRECAST ELEMENTS MEET ASTM M913 (CURRENT EDITION) UNLESS SUPERSEDED BY THIS DRAWING.

CONCRETE: $f'c$ = 28 MPa AT 28 DAYS
REINFORCING STEEL: ASTM A615M, f_y = 415 MPa
ALL REINFORCING IS TO BE INSTALLED AS DETAILED ON THIS DRAWING.

(D) PRECAST CATCH BASIN UNITS WHICH ARE DAMAGED DURING SHIPMENT OR INSTALLATION WILL BE REJECTED. IT SHALL BE THE RESPONSIBILITY OF THE CONTRACTOR TO REPLACE DAMAGED CATCH BASIN UNITS AT HIS OWN EXPENSE.

(E) ADDITIONAL REINFORCING STEEL NECESSARY ABOVE THE CORED OR FORMED CUT-OUT HOLES TO MAINTAIN THE INTEGRITY OF THE STRUCTURE DURING HANDLING AND PLACEMENT SHALL BE THE RESPONSIBILITY OF THE FABRICATOR.

(F) APPROPRIATE SIZING AND LOCATION OF LIFTING DEVICES SHALL BE THE RESPONSIBILITY OF THE FABRICATOR TO ASSURE BALANCED HANDLING DURING INSTALLATION OF THE CATCH BASIN.

(G) THE CONTRACTOR IS TO PATCH ALL LIFTING DEVICE HOLES AND PLACE A MINIMUM OF 25 mm OF COVER OVER THE HARDWARE OF THESE DEVICES ON BOTH TOP AND BOTTOM SURFACES.

(H) INVERT ELEVATIONS ARE TO BE ADJUSTED AS DIRECTED BY THE ENGINEER IN ORDER TO ACCOMMODATE INLET AND OUTLET PIPES.

(I) SEE STANDARD DRAWING DM-CBB-12A FOR DETAILS REGARDING CAST IRON GRATES, FRAMES AND CURB INLETS.

(J) PAYMENT FOR CATCH BASIN WILL BE MADE UNDER ITEM NUMBERS 611M10.01 CATCH BASINS, TYPE 10, 0m-1m TO 611M10.02 CATCH BASIN, TYPE 10, > 1m-2m PER EACH.

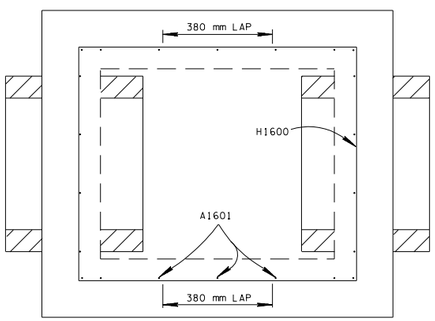

SECTION E-E

CATCH BASIN PIPE SIZE TABLE

MAX INLET OR OUTLET CONC. PIPE SIZE-STR. (mm)	MAX INLET OR OUTLET CONC. PIPE SIZE-90° (mm)
(X) 600	450

(X) TO BE USED IN FRONT AND BACK WALLS ONLY.

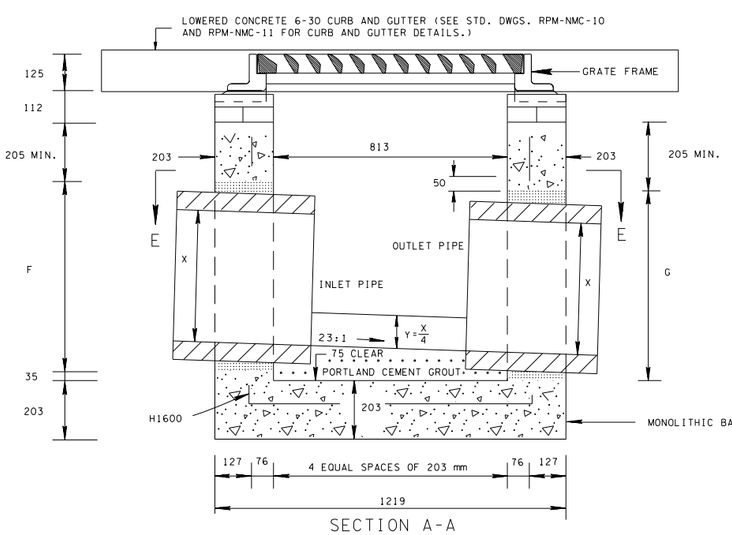

SECTION A-A

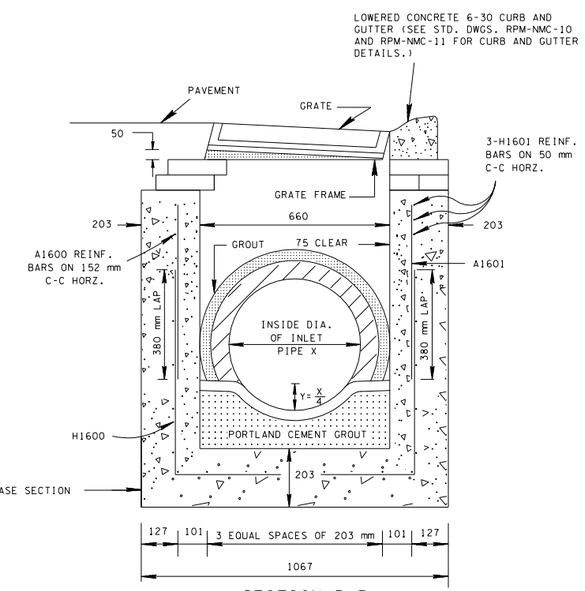

SECTION B-B

CATCH BASIN MINIMUM DEPTH TABLE

INSIDE DIAMETER (X) OF PIPE (mm)	MINIMUM DEPTH - (m)		
	CONCRETE PIPE	CORRUGATED METAL PIPE	POLYETHYLENE PIPE
375	0.95	0.90	0.92
450	1.04	0.97	1.01
600	1.19	1.12	1.18

(1) DEPTH MEASUREMENT MADE FROM TOP OF GRATE TO OUTLET FLOW ELEVATION BASED ON INLET AND OUTLET PIPES BEING THE SAME DIAMETER, IF OUTLET PIPE IS GREATER ADJUSTMENT IN DEPTHS MUST BE MADE TO ACCOMMODATE THIS SITUATION.

(2) MINIMUM DEPTH TO BE REDUCED BY 35 mm WHERE ONLY OUTLET PIPE EXIST.

(3) TO DETERMINE FLOOR OF CATCH BASIN ELEVATION, WHEN INLET AND OUTLET PIPES ARE THE SAME SIZE, ADD PIPE WALL THICKNESS PLUS 40 mm TO THE ABOVE MINIMUM DEPTHS.

CUT-OUT HOLES FOR INLET & OUTLET PIPES

INSIDE DIAMETER (X) OF PIPE (mm)	DIAMETER OF CUT-OUT HOLES F & G - (mm)		
	CONCRETE PIPE	CORRUGATED METAL PIPE	POLYETHYLENE PIPE
375	560	455	510
450	660	535	610
600	815	685	785

CUT-OUT HOLES FOR PRECAST STRUCTURES TO BE CORED OR FORMED IN ORDER TO OBTAIN A SMOOTH EDGED HOLE. SCORED OR ETCHED HOLES WITH REINFORCING STEEL LEFT UNCUT WILL NOT BE PERMITTED.

TENNESSEE METRIC D.O.T.

ALL UNITS ARE IN MILLIMETERS UNLESS NOTED OTHERWISE.

MINOR REVISION -- FHWA APPROVAL NOT REQUIRED.

STATE OF TENNESSEE
DEPARTMENT OF TRANSPORTATION

LOW PROFILE
LOWERED CURB
813 mm x 660 mm
RECTANGULAR
CONCRETE NO.10LPC
CATCH BASIN

2-28-02 DM-CB-10LPC

3/20/2007 8:26:03 AM
$$$$DGNSPEC$$$$